LENGTH TOLERANCE FOR CABLE ASSEMBLIES	
Inches	Millimeters
0 - 2IN +/- 0.040	0 - 51 +/- 1
2IN - 6IN +/- 0.080	51 - 153 +/- 2
6IN - 12IN +/- 0.140	153 - 305 +/- 3.5
12IN - 48IN +/- 0.250	305 - 1219 +/- 6.4
48IN - 144IN (12FT) +/- 0.500	1219 - 3658 +/- 13
144IN (12FT) - ABOVE +/- 1.0	3658 - ABOVE +/- 25
UNLESS OTHERWISE SPECIFIED ON DRAWING	

-XX IN THE ENDING OF THE CABLE PART NUMBER IS CALLING OUT THE LENGTH OF THE ASSEMBLY FROM CENTER TO MATING FLANGE OF CONNECTORS. EXAMPLES SHOWN BELOW:

LTI P/N: CBQ1-2SALRF3GT-4IN (4 INCHES)
CBQ1-2SALRF3GT-100MM (100 MILLIMETERS)

REVISIONS

REV	ECR	DESCRIPTION	DRAWN	DATE
1		ENGINEERING RELEASE	M. LARSEN	7/29/2024

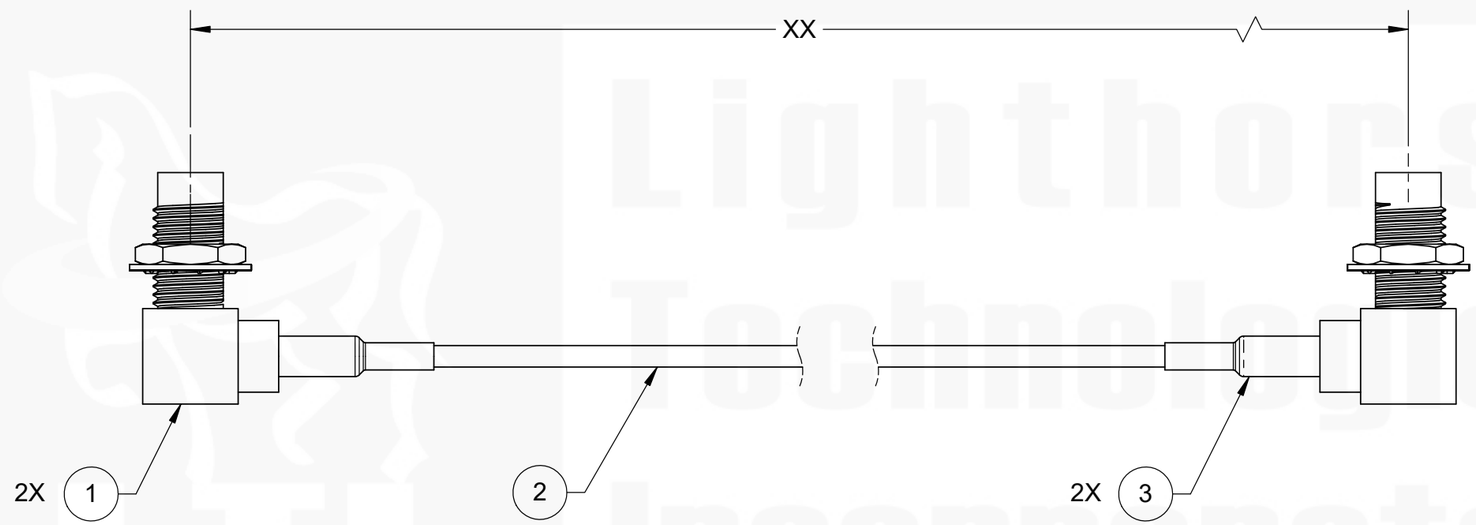

ITEM	PART NUMBER	DESCRIPITION	QTY
1	SALRF13RGT-316	RP-SMA, RIGHT ANGLE, REV POL JACK, BLKHD MNT, CABLE CRIMP	2
2	LTI-100	CABLE, LTI-100 COAX (LMR-100 Equivalent)	AR
3	1635F-3/16"	.188 (3/16) DIA, .75 LENGTH, GREEN	2

PROPRIETARY AND CONFIDENTIAL

UNLESS OTHERWISE SPECIFIED: THIS DOCUMENT CONTAINS LIGHTHORSE TECHNOLOGIES INFORMATION, REPRODUCTION, USE, DISCLOSURE OR TRANSMITTAL OF ALL OR ANY PART OF THIS DOCUMENT IS PROHIBITED EXCEPT TO THE EXTENT APPROVED IN WRITING BY AN AUTHORIZED REPRESENTATIVE OF LIGHTHORSE TECHNOLOGIES. LIGHTHORSE TECHNOLOGIES RESERVES ALL RIGHTS UNDER PATENTS, TRADEMARKS, COPY RIGHTS AND TRADE SECRETS. COPY RIGHTS OF LIGHTHORSE TECHNOLOGIES 2011, ALL RIGHTS RESERVED.

LEAD FREE Pb RoHS COMPLIANT

DO NOT SCALE DRAWING

TOLERANCES UNLESS OTHERWISE SPECIFIED
DIMENSIONS ARE IN MILLIMETERS
X = ±0.5
X.X = ±0.25
X.XX = ±0.13
ANGLE = ±30'

THIRD ANGLE PROJECTION

CUSTOMER APPROVAL

SIGN / DATE:		
ENG APPR.		
CHECKED		
DRAWN	M. LARSEN	7/29/2024
	NAME	DATE

Lighthorse Technologies
San Diego, CA
WWW.RFCONNECTOR.COM

TITLE: CABLE ASSEMBLY, RP-SMA, R/A JACK, BLKHD MNT, CRIMP TO RP-SMA, R/A JACK, BLKHD MNT, CRIMP USING LTI-100 CABLE

SIZE	PART/DWG. NO:	REV
B	CBQ1-2SALRF3GT-xx	1

SCALE: 2:1 | FILE NAME | SHEET 1 OF 1